Conference Proceedings

ASES National Solar Conference 2017

Denver, Colorado 9-12 October 2017

Thermal Collection and Heating Device for Spas

John J Tandler

Aztech Energy, LLC, Arvada, Colorado, USA

Abstract

A new type of solar appliance is presented which provides solar energy to heat portable electric spas. The design constraints are such that conventional photovoltaic and solar thermal solutions are not feasible, so a plastic solar collector and radiator is presented with air as the working fluid. An hourly simulation model is presented and validated with field data which shows the device reducing electric energy consumption for heating 43 to 98 percent depending on the climate zone, with simple economic paybacks between 1.5 and 3.5 years.

Keywords: *solar thermal, solar hot water, polymer solar collector, spa heater, hot tub heater*

1. Introduction

The portable electric spa is an industry term for a self-standing, electrically-powered hot tub. The purpose of such applicances is to provide thermal comfort and therapeutic treatments by immersion of most of the body in water that is heated to 35-39 degrees C. The majority of such spas are located outdoors, and as such the energy consumption to maintain the desired water temperature consumes a signficiant amount of electricity. Nationwide typical energy consumption for an outdoor electric spa is 800-2000 Wh/yr at a cost of US$200-400/yr. There are over 5.5 million such spas in operation in the United States, and over two million more in Canada and Europe, with about 185,000 new units sold each year in the US[1]. These spas collectively consume about 9.35 GWh of electricity annually, at an aggregate annual cost of $1.22 billion[2].

The typical spa measures about 1 meter tall and 2 to 2.5 meters on each side, with a top area of about 4.25-5.0 square meters. For surfaces with a full view of the sky, the solar resource for the spa itself is roughly the total horizontal irradiance of the top of the spa cover. For a typical 1500 W/m2 total irradiance[3], this represents over 7000 Wh of total solar resource on the top of the spa, or about four times the required heating energy. Thus, to first order, there is adequate solar resource available on the spa cover to provide a

© 2017. The Authors. Published by International Solar Energy Society
Selection and/or peer review under responsibility of Scientific Committee
doi:10.18086/solar.2017.04.03 Available at http://proceedings.ises.org

significant amount of the required heating energy. The design challenge is to collect the heat and delivery it to the water while meeting the formidable design constraints.

2. Spa Cover Constraints and Design Alternatives

2.1. Spa cover environment

The cover of the spa is an attractive location for a solar heating device because it an existing component of the spa product in close proximity to the water, and because it receives a great deal of incident solar energy. However, other aspects of the spa cover make it problematic for the location of a solar device. The spa cover must be removed and replaced by the spa user with each user of the spa, so weight is a significant constraint. A typical spa cover uses lightweight, rigid polystyrene boards as the core material, covered with polyethylene and marine vinyl for durability and water tightness. Governing safety specification ASTM F1346 requires that safety covers support a total of 215 kg[4], so heavier density foam and steel reinforcement beams are often used, which brings the weight of a typical spa cover to between 20 and 27 kg. This is already close to the lifting capability of a spa user, so the solar heating device can add only 5-7 kg to the cover without requiring special lifting hardware.

Fig. 1: Typical outdoor portable electric spa with cover

As a solar spa cover must be located outdoors, the solar device must handle typical outdoor environment of wind, rain, hail, snow and temperature extremes. The low temperature requirement, which is below freezing in most US climate zones, makes the use of water as the working fluid problematic. Water quality is also a primary concern; the possibility of an antifreeze fluid leaking into the spa water mitigates against its use.

2.2 Solar photovoltaics

Solar photovoltics alone are not well suited to the problem for several reasons. First, in general the conversion of the solar energy to electrical energy is beneficial in order to allow the energy to be transported to the load. In most PV applications, the electrical energy is transported at least a few meters and often many kilometers to its ultimate load. In the case of the solar spa cover, the end use is thermal, and it is in direct proximity to the solar device. Thus, the conversion to electricity only adds another cost to convert the electrical back to thermal. The second reason is cost. There are approximately 3 square meters of available space to mount PV panels on a spa cover, which would yield about 500W at an efficiency of 18 percent. At $1.00/W cost for the solar panels, the cost of the

solar collection system alone would be $500, driving the added retail cost over $1000, which is beyond cost the effective range. The third is efficiency, or energy density per unit area. The electric spa is a relatively dense load in terms of Watts required per unit of available area, and at 18% efficiency the PV can provide only about a quarter of the heating on a seasonal basis.

2.3 Conventional solar thermal

Conventional solar thermal solutions are also problematic. Even the lightest solar flat plate panels weigh about 10 kg per square meter, which would drive the added weight to several times the desired limit of 5-7 kg. Liquid collectors would require an antifreeze working fluid and a fluid connection to either the water tank or the existing spa water treatment system, either of which would require custom designs for integration with individual spa makes and models, signficiantly increasing costs.

3. Proposed Solar Collection and Heating Device

3.1 Air and energy flow in solar heater

The proposed patent-pending spa heater design is shown in Figure 2 below.

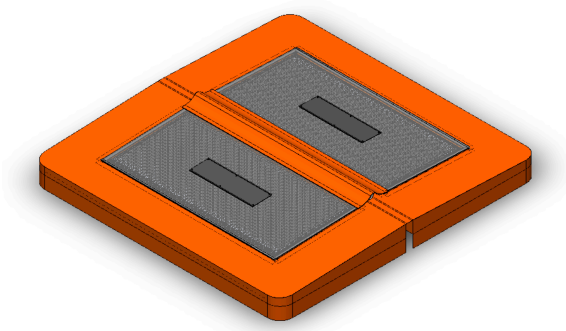

Fig. 2: Spa cover with embedded solar heating device (US Patent pending)

The two heating panels shown are embedded in each side of a standard polystyrene and vinyl cover. The heating panels occupy the entire depth of the cover so that the bottom of the heater is directly above the water in the spa. The two black rectangular features are small 10 W photovoltaic panels which provide the power to run the heaters, as discussed below.

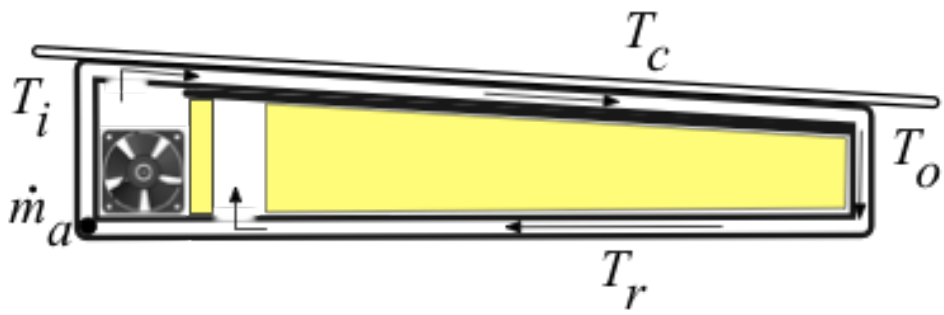

Fig. 3: Cross section of solar heater

A cross section of one of the heating elements is shown in Figure 3 above. The heater is comprised of an air loop formed of twinwall polycarbonate which surrounds an insulating core of rigid polyisocyanurate boards. The solar collector portion of the device is comprised of the top portion of the air loop and an upper layer of twinwall polycarbonate that forms a transparent insulating glazing. An enhanced representation of the air flow is shown in Figure 4 below.

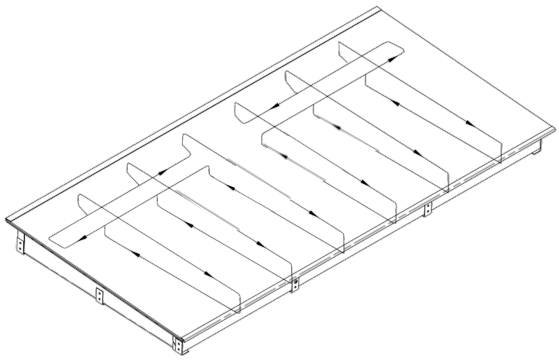

Fig. 4: Isometric view of air flow in solar heater

The top portion of the air loop is painted with a black paint or other absorbent coating (discussed in more detail below) so that incident sunlight is converted to heat. Two small axial fans push air through the channels in the upper twinwall sheet which raises the temperature of the air. The lower portion of the air loop is directly exposed to the air above the water in the spa, and so the air is cooled, transferring the heat by convection to the air just below the heater, and also by radiation directly to the water in the spa. The air is then collected in a return duct formed from the polyisocyanurate boards, and then back to the fan.

3.2 High efficiency directional absorber

The use of polycarbonate plastic as the absorber has many advantages in terms of weight and cost for the system, and its service temperature of 130C [5] is relatively high among low cost engineering plastics. However, this service temperature is low compared to conventional solar collector materials, and for a collector that has a reasonably high efficiency, the stagnation temperature of the absorber can easily exceed the service temperature. Therefore, special design features are necessary which permit good efficiency while remaining within service temperature limits.

Reference [6] outlines in great detail more than forty design approaches for limiting the stagnation temperature for polymer collectors. Many of these approaches were investigated and prototyped in the development of this product, including thermochromic and passive themosiphon techniques. However, none proved to have the desired low cost, reliability and service life. A novel, patent-pending approach to a collector design which has high efficiency and also limits the stagnation temperature was developed, which is described below.

As previously mentioned, in this design, the absorber element is comprised of a sheet of twinwall polycarbonate. The working fluid (air) flows directly through this sheet, and is in

intimate contact with the top sheet, the bottom sheet, as well as the vertical walls which form the flow passages. The transparent nature of the material allows for a cascading absorber, in which the upper sheet is only partially absorbent, and some of the incident solar energy is absorbed in the upper sheet, and some in the lower sheet. In addition, the heat is able to conduct through the vertical walls before being transferred to the air. So in effect, the area available to transfer heat from the collector surface to the fluid is the whole of the upper sheet and the lower sheets, plus the walls, or more about three times the area of the collector itself. (Contrast this to a standard liquid collector, in which the wetted area is less than 10 pecent of the collector area.) This very large heat transfer area allows for relatively low mass flowrates, so that even with laminar flow conditons, the terminal temperature difference between the air temperature and the absorber temperature is just a few degrees C.

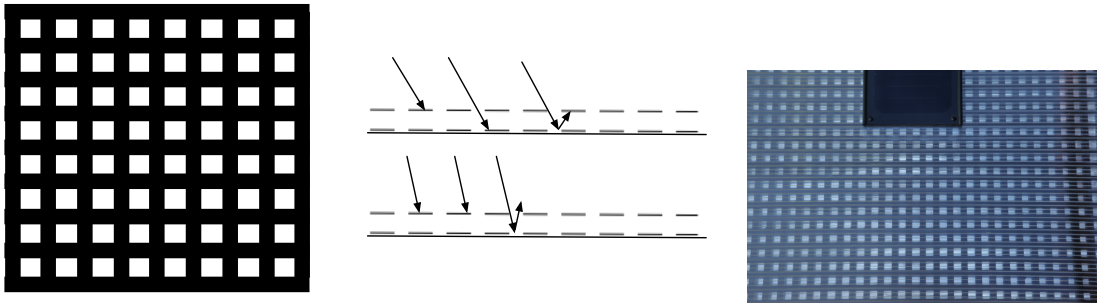

Fig. 5: Directional absorber detail views

The two layers of the absorber also offer an opportunity to vary the effective absorptance of direct beam solar energy as a function of the incidence angle of the beam. Figure 5 shows a the concept of a patent-pending two-layer absorber which is comprised of two identical gridded patterns which are printed or painted on the top and bottom layers of the twinwall plastic. The grids form small apertures in the top and bottom sheets which are directly aligned vertically and which have a characteristic dimension which is roughly equal to the thickness of the twinwall sheet, which in this case is 8 mm. Below the bottom layer is a sheet of specularly reflective material such as aluminized mylar which can reflect light that strikes with low incidence angle back to the sky.

Figure 4 shows that beam energy that strikes the collector with a high incidence angle is completely absorbed as it either 1) strikes the top side of the upper absorber, 2) strikes the top side of the lower absorber, or 3) is reflected and is absorbed by the lower side of the upper absorber. By contrast, a large portion of the beam energy that passes through upper and lower apertures at a low incidence angle strikes the reflector sheet and is reflected straight out of the upper aperture.

This design in essence puts a cap on the peak absorbed energy rate at the point most likely to cause damage in the case of stagnation. Figure 6 shows the effective absorptance by hour of the day at three times of year for a horizontal absorber surface as on a horizontal spa cover. During the winter solstice, the absorptance is the same as it would be with a conventional uniform absorber. During the spring equinox, the higher sun angles near midday limit the peak energy rate to below 700 W/m2. During the summer solstice, when

the highest solar heat rates occur, the heat rate is effectively capped at 700 W/m2.

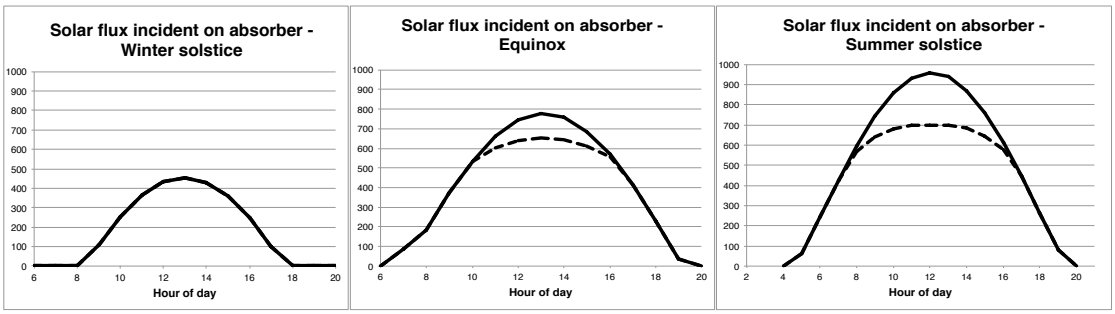

Fig. 6: Seasonal variation in directional solar absorber

This approach has the advantage of being a totally passive approach which limits the potential for overheating, but has the disadvantage of throwing away some solar energy when it could potentially be used for useful heating. The hourly simulation model described later in this paper shows that this approach captures about 92 percent of the energy of a conventional flat absorber at a latitude of 40 degrees. However, since much of the solar energy is not needed during the warmer months, the effect on the overall system performance is less than two percent.

3.3 Directional absorber mathematical model

A cross section of a small portion of the directional absorber is shown in Figure 6 below.

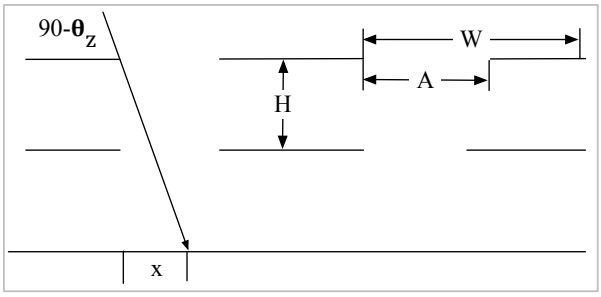

Fig. 7: Model of directional absorber element

A cross section of a small portion of the directional absorber is shown in Figure 7 above. The fraction of incident solar beam energy F_m that strikes the mirrored surface and is reflected back to the sky can be expressed as:

$$F_m = \frac{A^2}{W^2}\left(1 - \frac{H}{A}\tan\theta_z\right) \qquad \text{(eq. 1)}$$

where:

A	Characteristic dimension of the aperture (mm)
W	Dimension of the repeat pattern of the grid (mm)
H	Thickness of the twinwall sheet (mm)
θ_z	Zenith angle is solar vector (radians)

The effective absorptance α_c of the composite absorber is:

$$\alpha_c = \alpha_m F_m + \alpha_a(1 - F_m) \qquad \text{(eq. 2)}$$

where:

α_m	Absorptance of mirror material
α_a	Absorptance of black painted absorber material

3.3 Electrical system

The electrical system is described below. A small PV panel on the top of each heater provides power to the controller and fans. A normally open bimetallic switch in series with the power source is inserted in one of the absorber channels and is set to close when the absorber reaches a temperature a few degrees warmer than the spa water. A second controller also in series with the power supply is an electronic thermostat which is driven by a temperature probe which hangs from the bottom of the cover into the water in the spa. This is set to turn the fans off when the spa water reaches a maximum desired temperature. A set of LED indicator lights provides the user with status of the system. The fans are brushless DC motor axial fans with a wide voltage input range and so can be powered directly from the PV without need for a regulator. The fans are designed for long life in high temperature conditions.

4. Energy Model of Solar Collection and Heating Device

4.1. Energy balance equations

An energy balance diagram of the solar heater is shown in Figure 8 below, and the following relations can be derived from the relationship of the elements and the quantities defined in Figures 3 and 9. First, the net solar energy gained by the collector portion of the heater can be defined as:

$$\dot{Q}_c = \eta G_h \alpha(\theta_z)\tau - U_c A_c (T_c - T_a) \qquad \text{(eq. 3)}$$

where:

$\dot{Q}_c$	Net heat absorbed by collector (W/m^2)
η	Collector thermal efficiency
G_h	Global horizontal irradiance (W/m^2)
$\alpha(\theta_z)$	Absorptance of solar collector (which is a function of solar zenith angle)
τ	Transmissivity of collector glazing
U_c	Overall heat transfer coefficient between collector fuid and ambient (W/K-m^2)
A_c	Area of solar collector (m^2)
T_c	Average temperature of solar collector (C)
T_a	Ambient temperature (C)

An energy balance of the lower half of the air loop, the radiator portion of the heater, yields:

$$\dot{m}_a c_{pa}(T_o - T_i) = U_r A_r (T_r - T_w) \qquad \text{(eq. 4)}$$

where:

$\dot{m}_a$	Mass flow of air through the loop (kg/s)
c_{pa}	Specific heat of air

T_o	Temperature of the air leaving the radiator (C)
T_i	Temperature of the air entering the radiator (C)
$U_r(T_r)$	Linearized heat transfer coefficient between radiator and spa water (W/K-m^2)
A_r	Area of radiator (m^2)
T_w	Temperature of the water in the spa (C)

Finally a dynamic overall energy balance of the entire spa yields the following differential equation:

$$\frac{d(T_w)}{dt} = \left(\frac{\dot{Q}_r + \dot{Q}_e - \dot{Q}_l}{M_w c_w}\right) \qquad \text{(eq. 5)}$$

where:

$\dot{Q}_e$	Energy added to the spa water via conventional electric heater (W)
$\dot{Q}_l$	Energy transferred from spa water to ambient (W)
M_w	Mass of water in the spa (kg)
c_w	Specific heat of water (J/kg-K)

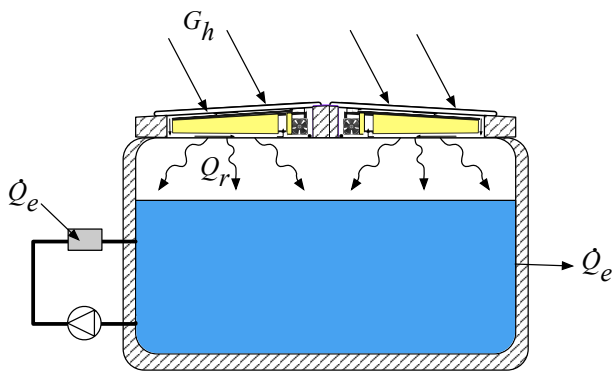

Fig. 9: Energy balance model of spa and heating device

3.1. Control law equations

The electrical schematic shown in Figure 4 shows two actuators which control the operation of the solar heater fans, and the Figure 5 shows an electrical heater which require control laws.

$$If\ T_w < T_{set}\ then\ \dot{Q}_e = \dot{Q}_{e)set}\ else\ 0 \qquad \text{(eq. 6)}$$

$$If\ (T_c > T_w)\ AND\ (T_w < T_{max})\ then\ \dot{m}_a = 0\ else\ \dot{m}_{a)set} \qquad \text{(eq. 7)}$$

where:

T_{set}	Setpoint to turn on electrical heater (C)
T_{max}	Maximum allowable water temperature (C)

5. Hourly simulation model

5.1. Model execution and validation

The above equations were implemented in a software tool which allows for the model to be driven by either measured environmental data or TMY3 climate data[7]. A prototype of

the solar spa heater was assembled by Aztech Energy on a spa near Denver, Colorado, in March of 2017, and has been monitored for internal temperatures, air flow rates and overall spa heat balance. The measure temperature profile of the spa heater is shown in Figure 10 below, and the predicted and measured heat flux is shown in Figure 11. The predicted and measured heat fluxes are in close agreement.

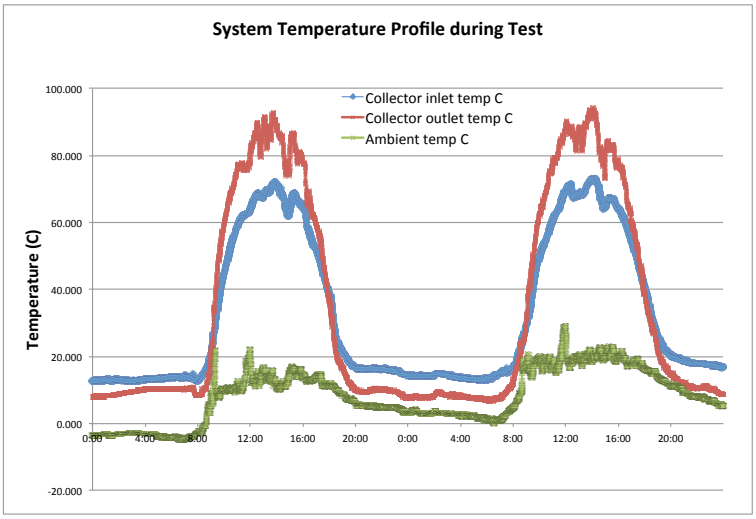

Fig. 10: Spa heater temperature profile for April 4 test in Colorado

6. Hourly simulation results for various climates

The validated simulation model was run for 14 cities around the United States. For each city, the TMY3 data was used as boundary conditons, and the solar zenith and azimuth angles were calculated using an online solar positon calculator model[8] and used for solar position information. Elevation and azumith masks were implemented to simulate

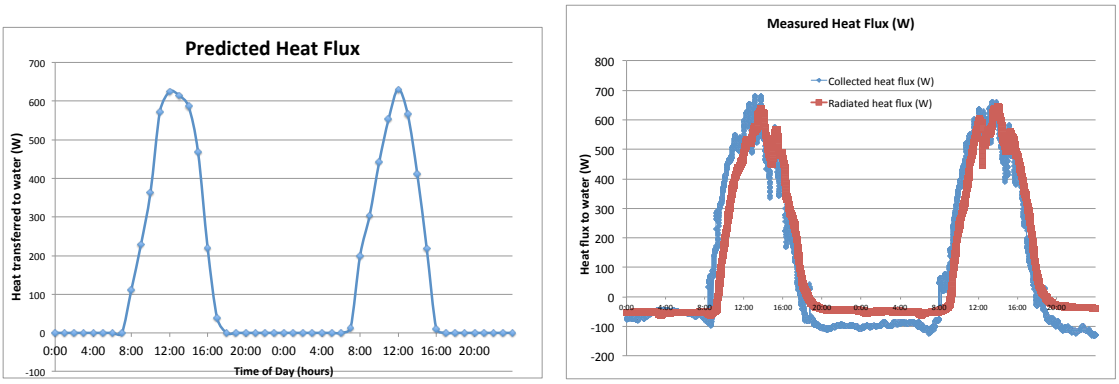

Fig. 11: Spa heater predicted and measured heat flux

blockage due to foliage, buildings and screens. A 20 degree elevation mask was implemented on all model runs to simulate typical landscaping and blockage due to nearby structures; no azimuth mask was implemented which implies the spa has an unobstructed view of the sky above the elevation mask.

Electricity rates were obtained from publicly available utility rate schedules and were used

for cost calculations for each location.

The model was exercised with and without the solar heater for calculation of the energy and cost savings with the results in the Table 1 below.

Table. 1: Energy and cost savings estimates for selected cities

Location	Baseline usage kWh	Solar cover usage kWh	Percent reduction	Cost savings over 5 yrs	Simple payback
San Diego	1365	216	84.2%	$1,403	1.43
Phoenix	886	170	80.8%	$477	4.19
Boston	1770	1000.8	43.5%	$854	2.34
Houston	1057	275	74.0%	$520	3.84
Denver	1765	833	52.8%	$827	2.42
Santa Fe	1699	593	65.1%	$736	2.72
Los Angeles	1322	236	82.1%	$1,085	1.84
Kona, HI	812	0	100.0%	$1,441	1.39
Miami	843	28	96.7%	$614	3.26
Monterey	1555	425	72.7%	$1,411	1.42
Cape May	1532	685	55.3%	$738	2.71
Vail, CO	1986	1008	49.2%	$543	3.68
Ann Arbor	1776	1042	41.3%	$550	3.64
Seattle	1672	936	44.0%	$531	3.77

7. Conclusions

A novel solar collector/heater has been design and tested which meets the challenging performance, weight, and cost requirments of a commercial consumer product. A dynamic mathematical model was developed and validated with field data. This model was exercised for 14 cities in various climate zones across the US and the economics of the product were found to be promising, with paybacks ranging from 1.4 to 4.2 years.

References

[1] Associaiton of Pool and Spa Professionals Industry Statistics, 2015: http://www.apsp.org/Portals/0/2016%20Website%20Changes/2015%20Industry%20Stats/2015%20Industry%20Stats.pdf

[2] Portable Electric Spas TN 73027 California Codes and Standards Enhancement (CASE) Initiative For PY 2012: Title 20 Standards Development.

[3] National Renewable Energy Laboratory, PVWatts tool http://pvwatts.nrel.gov

[4] ASTM Standard F1346 Standard Performance Specification for Safety Covers and Labeling Requirements for All Covers for Swimming Pools, Spas and Hot Tubs

[5] "Lexan sheet technical manual" (PDF). SABIC. 2009

[6] Christoph Reiter, Polymeric Solar-Thermal Flat-Plate Collectors, 2014 PhD dissertation for De Monfort University Leicester

[7] National Solar Radiation Data Base 1991- 2005 Update: Typical Meteorological Year 3

[8] National Renewable Energy Laboratory Measurement and Instrumentation Data Center (MIDC) Online Solar Position Algorithm Calculator https://midcdmz.nrel.gov/solpos/spa.html